Data Sheet

Article number: 2001200214
Description: E+G
Indexing plunger GN 608-6-14

Measures

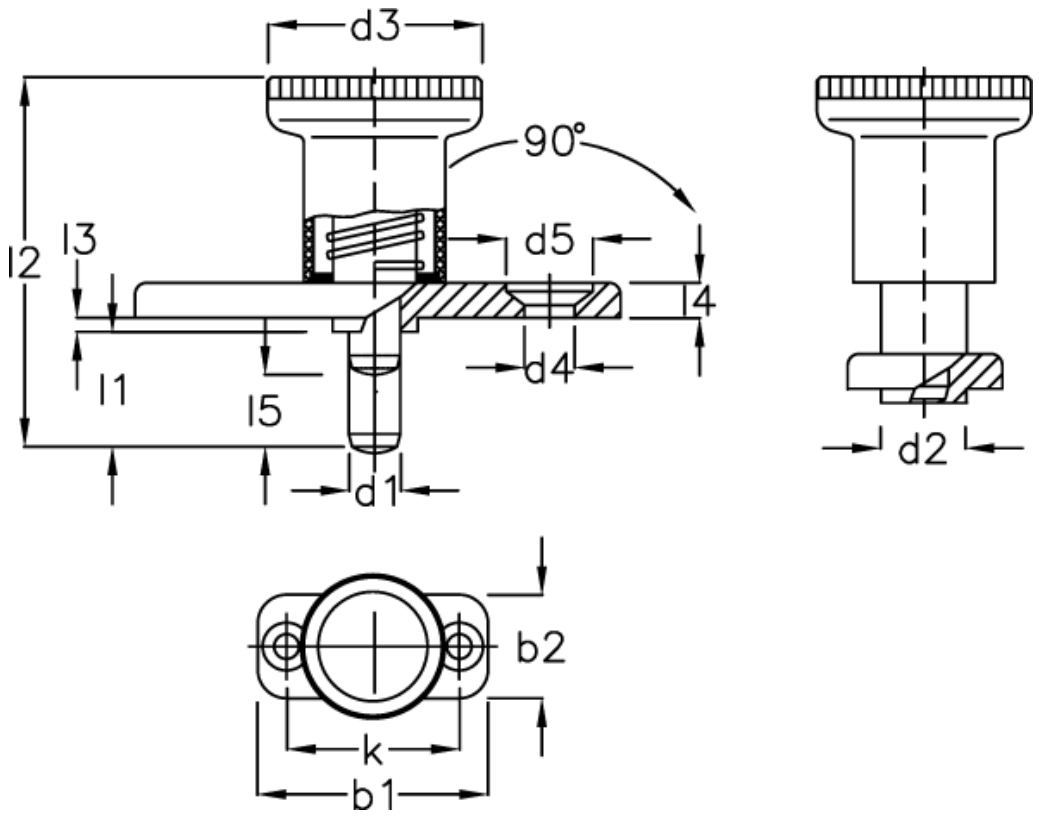

AL	= 400	k	= 30
b1	= 40	l1	= 14
b2	= 18	l2	= 37/45
d1 -0.02/-0.04	= 6	l3 -0,15	= 2.5
d2 -0.02/-0.1	= 10	l4	= 4.5
d3	= 25	l5	= 6
d4	= 4.3	Spring pressure N bottom	= 22
d5	= 8.3	Spring pressure N top	= 8.5

Product drawings and brochures of any kind may contain errors for which Brd. Klee A/S cannot be liable.